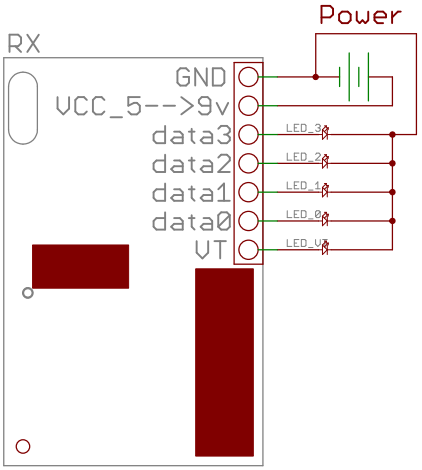
Power
RX
GND
VCC_5-->9v
data3
data2
data1
data0
VT
LED_3
LED_2
LED_1
LED_0
LED_VT

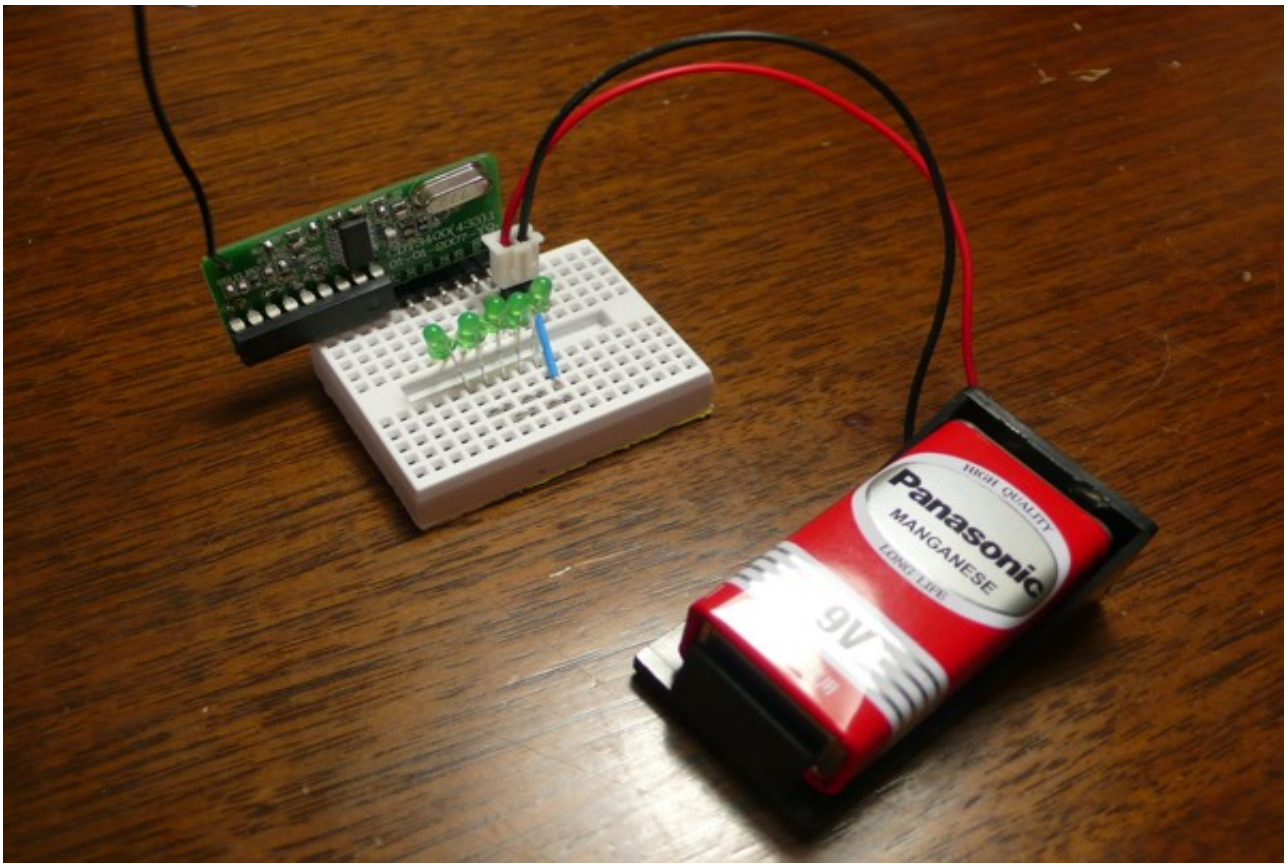
Panasonic
MANGANESE
9V

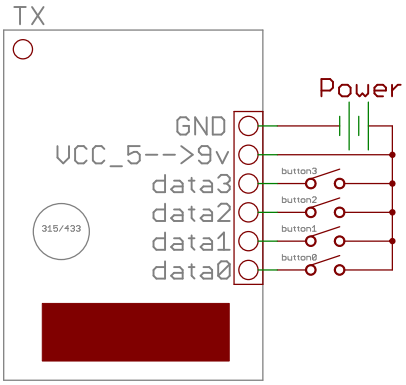
TX
Power
GND
VCC_5-->9v
data3
data2
data1
data0
315/433
button3
button2
button1
button0

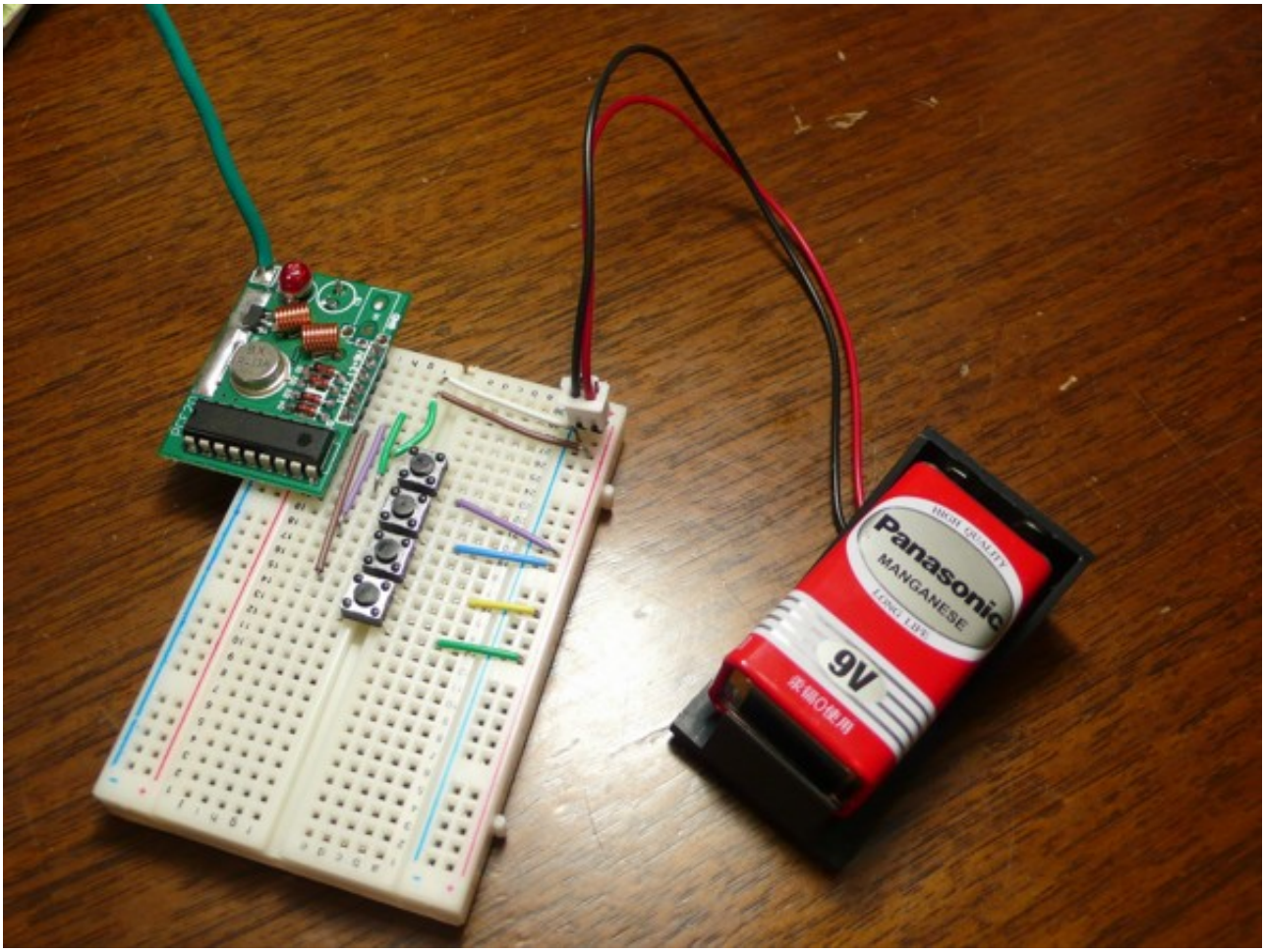
Panasonic
MANGANESE
9V